OZ-ser-RS8 Servo Control Chip With RS-232. Application Circuit

http://www.endtas.com/robot

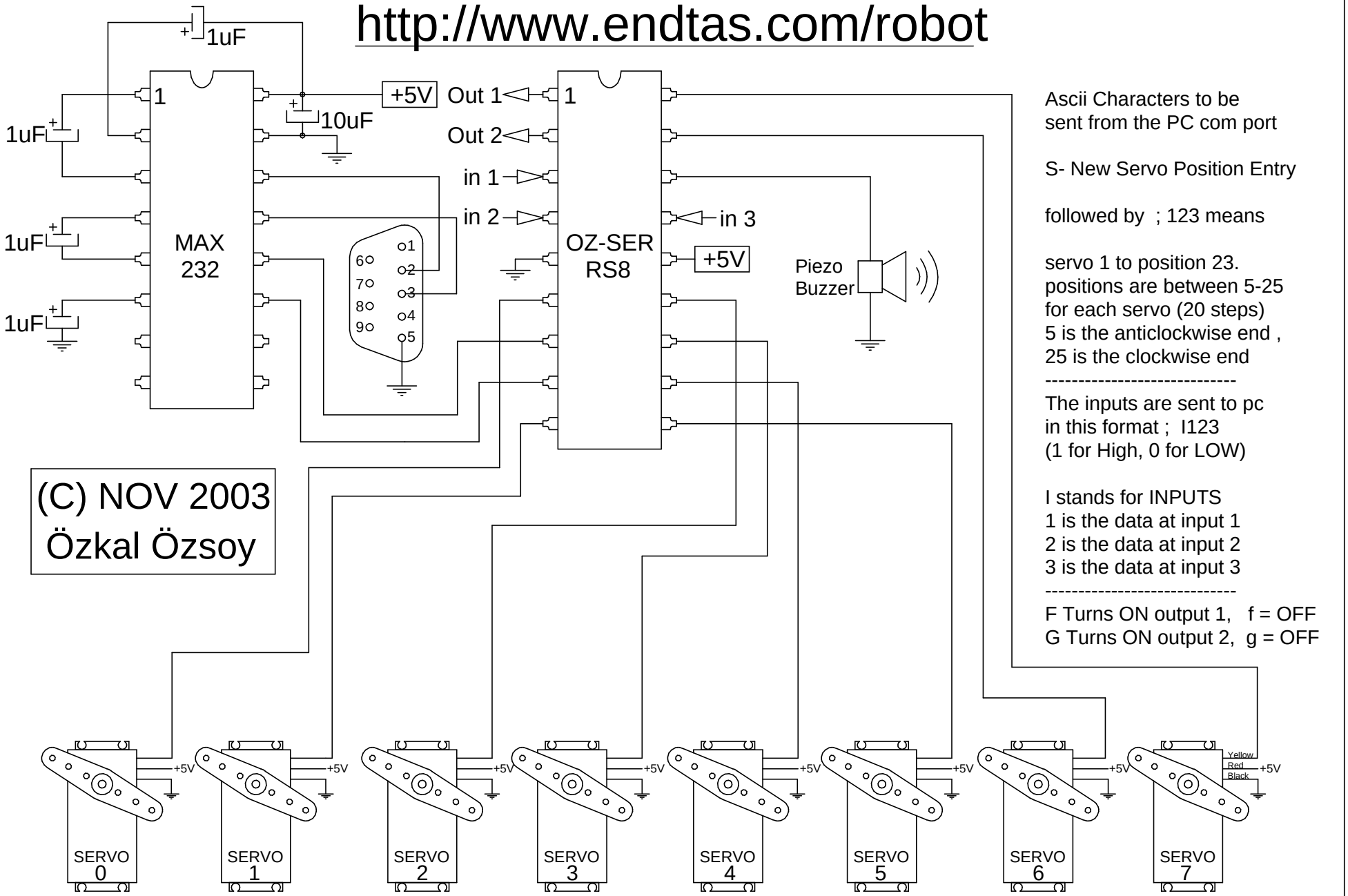

PDF created with FinePrint pdfFactory Pro trial version http://www.fineprint.com